GREENHECK
Building Value in Air.

SKU
WTHD-36-90

Job Name:
Mark:
Submitted By:
Date: 02/01/2026

Weatherhood Kit, For 36 In Sidewall Prop Fan, 90º turn down

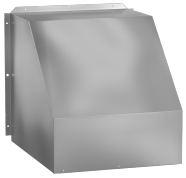

Weatherhoods shield wall openings and dampers from rain and snow. Weatherhoods are shipped unassembled in kit form for field assembly. Construction is of galvanized steel with wire mesh birdscreen.

Certifications

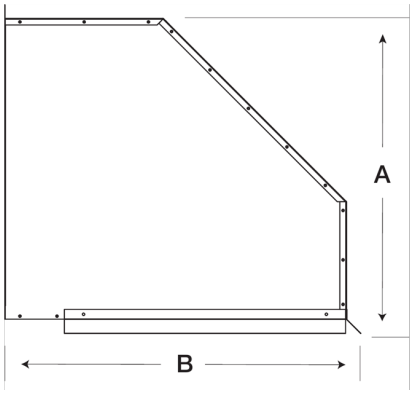

Performance Characteristics

No Fan Curve Available.

Construction Features

Turn Down Angle	90º