GREENHECK
Building Value in Air.

SKU
CUBE-180-15130GQD-DR1

Job Name:
Mark:
Submitted By:
Date: 02/04/2026

Centrifugal Upblast Exhaust Fan, Model CUBE-180, Belt Drive, 1 1/2HP, 115/208-230V, 1Ph, Motor & Drives Unassembled, 2365-4269 CFM

The CUBE is an aluminum exhaust fan specifically designed for roof or sidewall mounted applications where contaminated or grease laden exhaust air can be discharged directly upward, away from the roof or wall surface. The fans feature a one piece windband continuously welded to curb cap and double studded isolators for true vibration isolation.

- 30 x 30 inch base with prepunched mounting holes for easy attachment to roof curb
- 26.5 x 26.5 inch recommended roof opening
- Roof or wall mountable

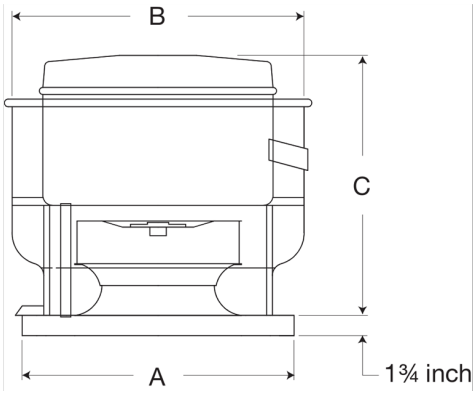

Certifications

AMCA Sound &Air
UL/cUL 705 Listed - Supplement SC - "Power Ventilators for Restaurant Exh. Appliances" (Formerly UL 762)

Performance Characteristics

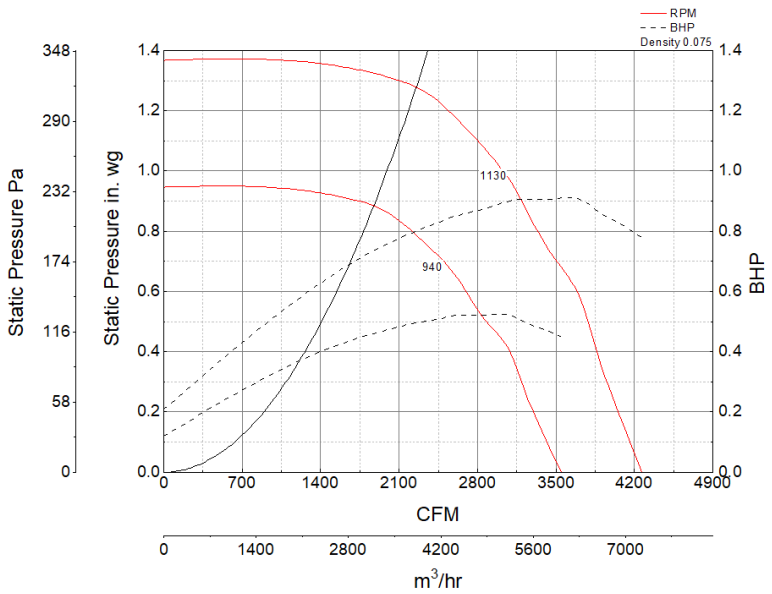

Construction Features

Drive Type	Belt Drive
Impeller Type	Centrifugal Wheel
Impeller Material	Aluminum
Housing Material	Spun Aluminum
Includes	Unassembled drive package
Certifications	AMCA Sound &Air
Certifications	UL/cUL 705 Listed - Supplement SC - "Power Ventilators for Restaurant Exh. Appliances" (Formerly UL 762)
Drive Package Description	Motor and drives shipped loose
Required Accessory	Roof curb for new roof installations

Motor Information

Phase	1
Voltage	115/208-230
HP	1 1/2
Motor Enclosure	Open Drip Proof
Motor Insulation	B
Thermal Protection	AutoOverload

Air and Sound Performance

Motor HP	Max BHP	Max Fan RPM	Min Fan RPM	Ps (in. wg)	0	0.125	0.25	0.375	0.5	0.625	0.75	0.875	1	1.25
1 1/2	0.91	1130	940	CFM	4,269	4,134	4,006	3,887	3,781	3,628	3,420	3,233	3,010	2,365
				Sones	17.8	17.3	16.7	16.6	16.3	16.1	15.6	15.3	14.7	13.6

- Greenheck Fan Corporation certifies that the model shown herein is licensed to bear the AMCA Seal.
- The ratings shown are based on tests and procedures performed in accordance with AMCA Publication 211 and AMCA Publication 311 and comply with the requirements of the AMCA Certified Ratings Program.
- Performance certified is for installation type A: Free inlet, Free outlet.
- Power rating (BHP/kW) includes transmission losses.
- Performance ratings do not include the effects of appurtenances (accessories).
- The sound ratings shown are loudness values in fan sones at 5 ft. (1.5 m) in a hemispherical free field calculated per AMCA Standard 301. Values shown are for installation type A: free inlet hemispherical sone levels.