GREENHECK
Building Value in Air.

SKU
GB-140-4122XQD

Job Name:
Mark:
Submitted By:
Date: 02/05/2026

# Centrifugal Downblast Exhaust Fan, Product # GB-140-4122XQD, 1085-1595 CFM

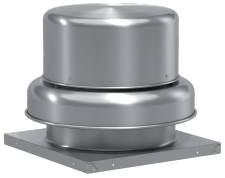

Model GB, belt drive centrifugal roof exhaust fans are designed to meet the general clean air exhaust requirements for industrial and commercial buildings. Units feature a fully rolled windband bead for increased stability and easy transport. Fresh outside air is drawn in under the motor cover to maximize motor life.

- 22 x 22 inch base with prepunched mounting holes for easy attachment to roof curb
- Variable pitch adjustable motor pulley to optimize fan performance
- 18.5 x 18.5 inch recommended roof opening

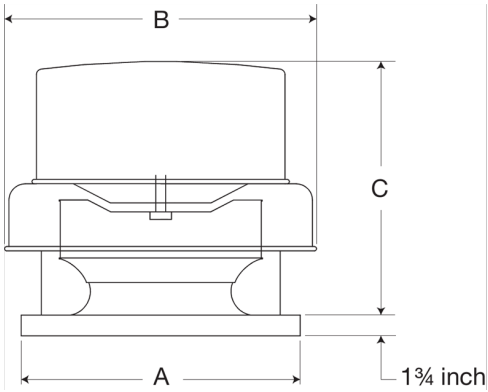


## Certifications

AMCA Sound &Air
High Wind and Hurricane
Seismic
UL/cUL 705

## Performance Characteristics

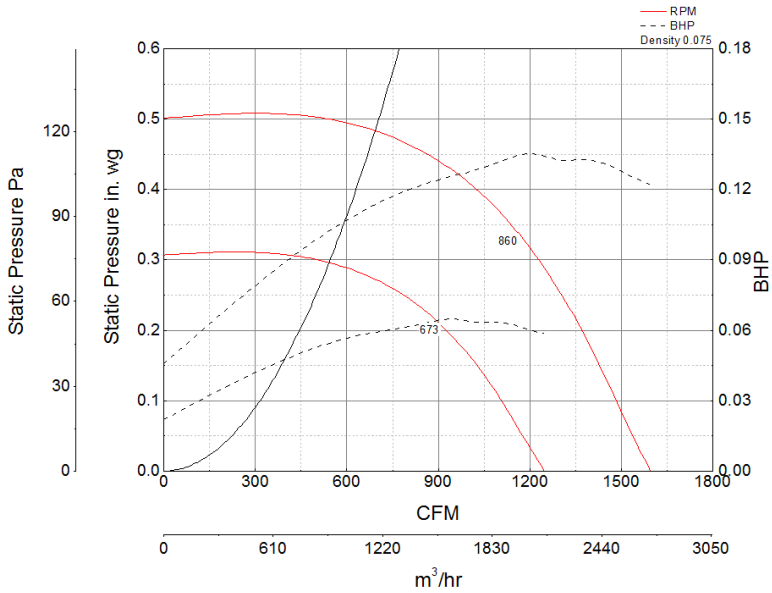


## Construction Features

| | |
|---|---|
| Drive Type | Belt Drive |
| Impeller Type | Centrifugal Wheel |
| Impeller Material | Aluminum |
| Housing Material | Spun Aluminum |
| Includes | Assembled drive package |
| Includes | Disconnect switch |
| Certifications | AMCA Sound &Air |
| Certifications | High Wind and Hurricane |
| Certifications | Seismic |
| Certifications | UL/cUL 705 |
| Drive Package Description | Motor and drives assembled |
| Required Accessory | Roof curb for new installations |

## Air and Sound Performance

| Motor HP | Max BHP | Max Fan RPM | Min Fan RPM | Ps (in. wg) | 0 | 0.125 | 0.25 | 0.375 |
|---|---|---|---|---|---|---|---|---|
| 1/4 | 0.13 | 860 | 673 | CFM | 1,595 | 1,457 | 1,304 | 1,085 |
| | | | | Sones | 7.2 | 7.2 | 6.8 | 6.2 |